Bolt sleeve connector

Code	Type	Material	Surface Treatment
ADC21	Bolt sleeve connector	Carbon steel	Blue zinc plating

Used for vertical connection between two extrusions.

ADC21-4010

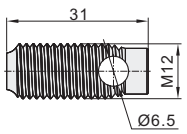

Code	Weight(g/pcs)
ADC21-4010	24.4

EX
Example

Exploded drawing

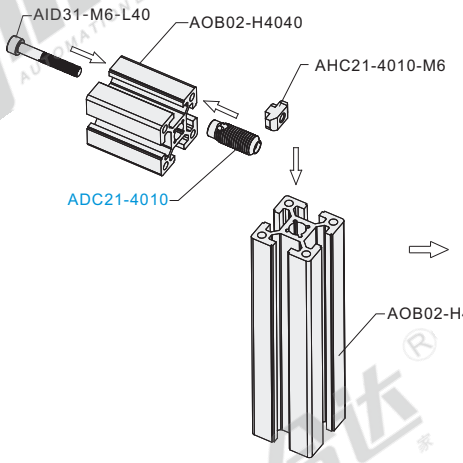

Assembly drawing

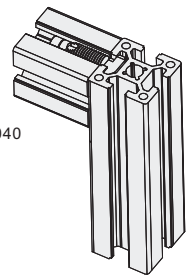

The first perspective

Please order as shown

Code
ADC21-4010

Quotation Way FAX

Optional Processing

Code ADC21-4010-SET-OB

Add processing project	Code	Spec.
Equipped with suitable bolts and T nuts	SET-OB	When SET is specified, it is equipped with bolts and T nuts matched with bolt sleeves connector.(Example) Bolt: AID31-M6-L40 T nut: AHC21-4010-M6