Pillow Block Units

- with Grease Fittings
- Compact with Grease Fittings

Cast Housing

with Grease Fittings

Code	Material	
	Housing	Bearing
BDJ	HT200 Gray Cast Iron	GCr15

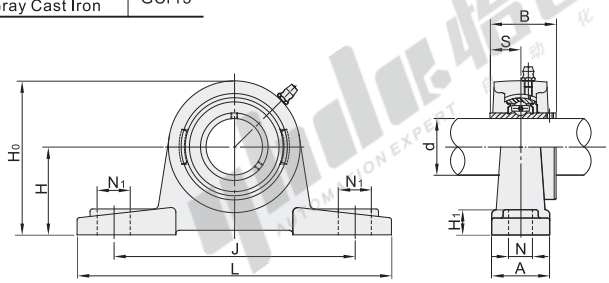

Accuracy: JIS B 1558
JIS B 1514
JIS B 1559
(GB/T 7809-1995)

The first perspective

Part Number Code	Part Number No.	GB Part Number	d	H	L	J	A	N	N_1	H_1	H_0	S	B	Mounting Hole Size (Δ) Tolerance	Mounting Hole Position Deviation x	Bolt	Tightening Torque (N·m)	Basic Load Rating(N) Cr(Dynamic)	Basic Load Rating(N) Cor(Static)	Mass (g)
BDJ	201	UCP201	12	30.2	127	95	38	13	19	15	62	12.7	31	±0.5	0.6	M10	17	12800	6650	630
	202	UCP202	15																	
	203	UCP203	17																	
	204	UCP204	20	33.3							65									650
	205	UCP205	25	36.5	140	105			16	16	70	14.3	34					14000	7880	790
	206	UCP206	30	42.9	165	121	48	17	21	18	83	15.9	38.1		0.8	M14	47	19500	11200	1300
	207	UCP207	35	47.6	167	127				19	94	17.5	42.9					25700	15200	1600
	208	UCP208	40	49.2	184	137	54		25		100	19	49.2					29600	18200	2000
	209	UCP209	45	54	190	146			22	20	108							31850	20800	2200
	210	UCP210	50	57.2	206	159	60	20	25	22	114		51.6			M16	73	35100	23200	2800

Please order as shown

Part Number Code	Part Number No.	GB Part Number
BDJ	201	UCP201
	202	UCP202

BDJ — 201

Discount price

Per	1~9	10~
Price	100%	Additional quotation

Delivery 8

Compact with Grease Fittings

Code	Material	
	Housing	Bearing
BDP	HT200 Gray Cast Iron	GCr15

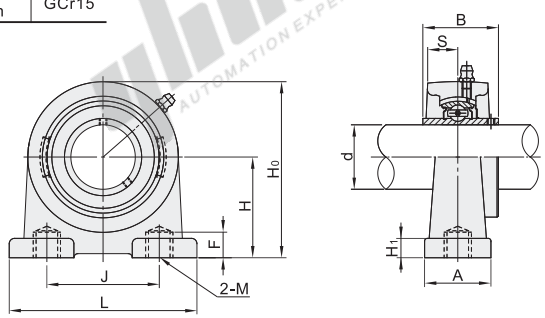

Accuracy: JIS B 1558
JIS B 1514
JIS B 1559
(GB/T 7809-1995)

The first perspective

Part Number Code	Part Number No.	GB Part Number	d	H	L	J	A	H_0	H_1	S	B	F	M	Mounting Hole Size (Δ) Tolerance	Mounting Hole Position Deviation x	Tightening Torque (N·m)	Basic Load Rating(N) Cr(Dynamic)	Basic Load Rating(N) Cor(Static)	Mass (g)
BDP	203	UCPA203	17	30.2	76	52	38	62	8	12.7	31	12	M10	±0.5	0.6	17	12800	6650	520
	204	UCPA204	20																500
	205	UCPA205	25	36.5	84	56		72	10	14.3	34	15					14000	7880	720
	206	UCPA206	30	42.9	94	66	48	84		15.9	38.1	18				47	19500	11200	1020
	207	UCPA207	35	47.6	110	80		95		17.5	42.9	20	M14		0.8		25700	15200	1580
	208	UCPA208	40	49.2	116	84	54	100	12	19	49.2						29600	18200	1840
	209	UCPA209	45	54.2	120	90		108				25					31850	20800	2060
	210	UCPA210	50	57.2	130	94	60	116	14		51.6		M16			73	35100	23200	2440

Please order as shown

Part Number Code	Part Number No.	GB Part Number
BDP	203	UCPA203
	204	UCPA204

BDP — 203

Discount price

Per	1~9	10~
Price	100%	Additional quotation

Delivery 8